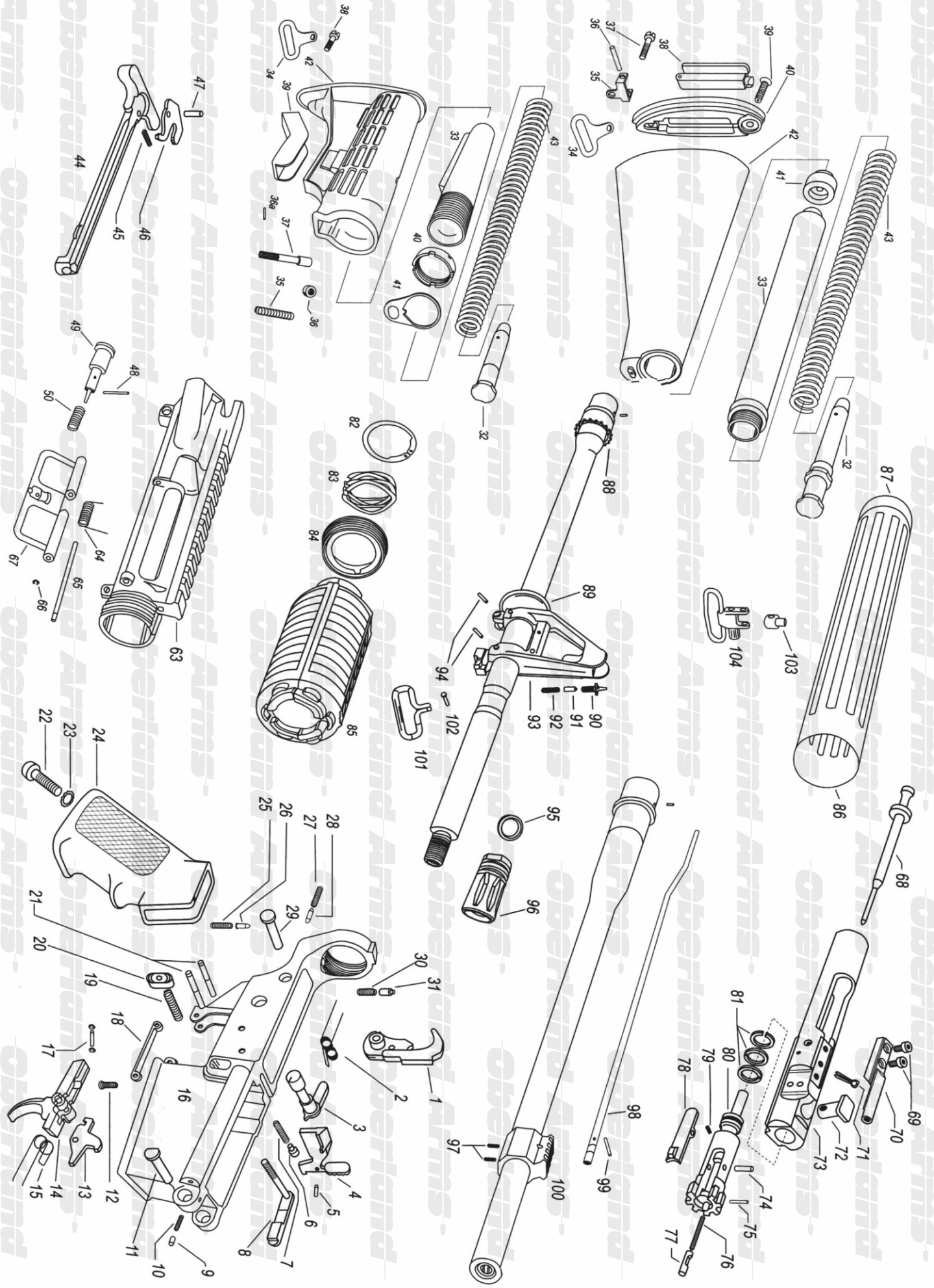

Oberland Arms
Where Innovation is @ Home!

Oberland Arms oHG • Am Hundert 3 • 82386 Huglfing - Germany
Fon: +49 (0) 8802 - 914 750 • Fax: +49 (0) 8802 - 914 751
order@oberlandarms.com • www.oberlandarms.com